LODES

Recessed Micro
design by Lodes, 2022

Recessed Canopy

Create truly unique combinations of light fixtures with Lodes' canopies!
Select a lamp, choose your canopy and create your bespoke composition!

Crea combinazioni di luci veramente uniche con i rosoni Lodes!
Seleziona una lampada, scegli il tuo rosone e crea la tua composizione personalizzata!

lodes.com/configurator

↘ Rosone da incasso per lampada singola

↘ Recessed canopy for single lamp

↘ This canopy is to be used exclusively for the installation of Lodes luminaires

↘ Questo rosone va utilizzato esclusivamente per l'istallazione di apparecchi Lodes

100IS01E0001_Rev02

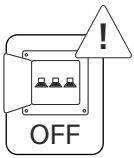

EN Before installing the device and, in any case, before any maintenance work, always disconnect the power supply.

IT Prima di installare l'apparecchio e comunque prima di ogni manutenzione togliere la tensione di alimentazione.

FR Avant d'installer le luminaire et avant toute opération de maintenance, couper l'alimentation électrique.

DE Vor der Installation des Geräts und in jedem Fall vor jeder Wartung ist die Stromversorgung zu unterbrechen.

ES Antes de instalar el aparato y en cualquier caso antes de cada mantenimiento cortar la alimentación.

RU Перед установкой прибора и перед проведением техобслуживания отключите электропитание.

ZH 安装照明设备以及进行任何维护之前均应断开电源。

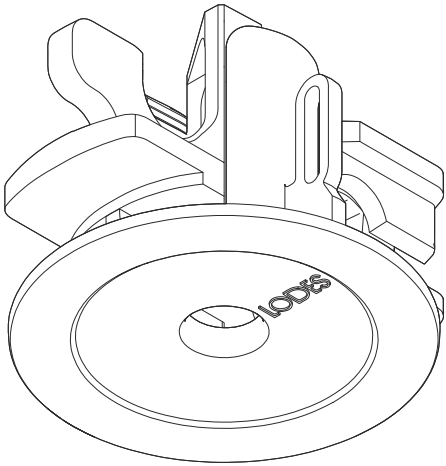
LODES

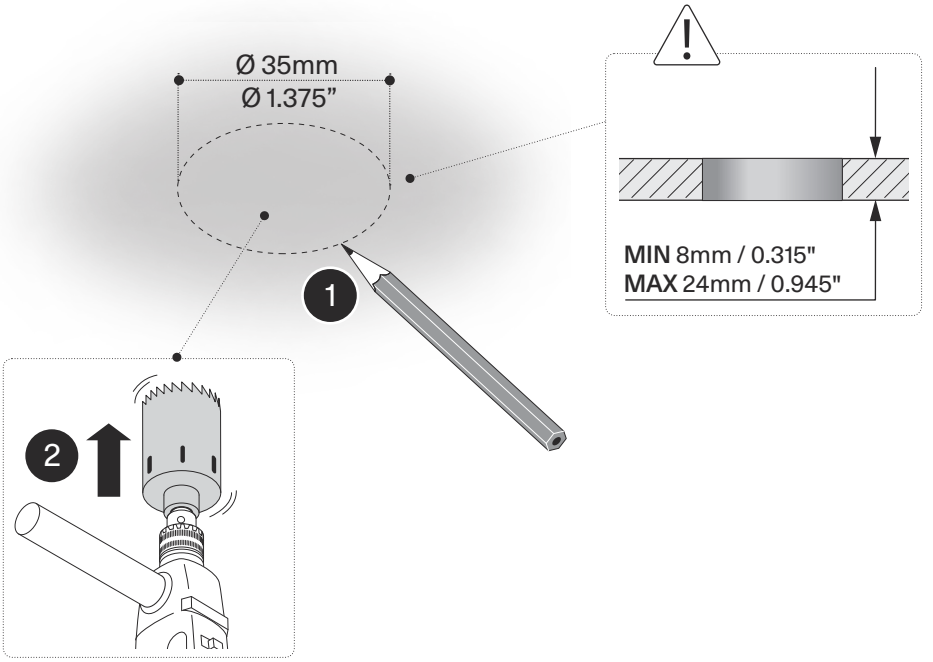
Ø 35mm
Ø 1.375”
1
MIN 8mm / 0.315"
MAX 24mm / 0.945"
2

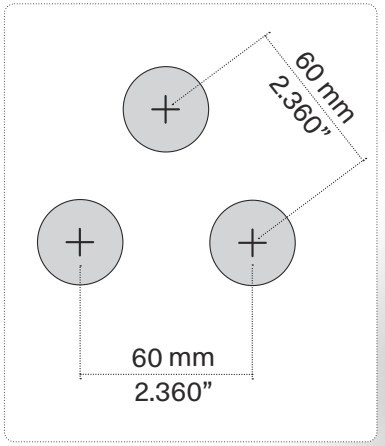
60 mm
2.360”
60 mm
2.360”

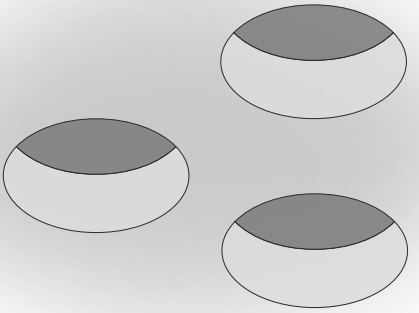

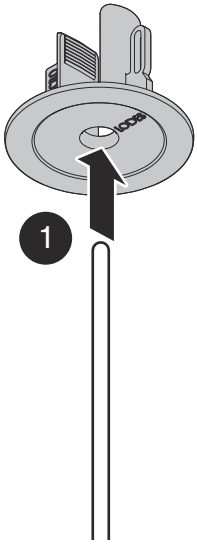
1

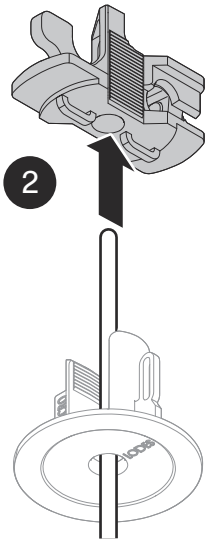
2

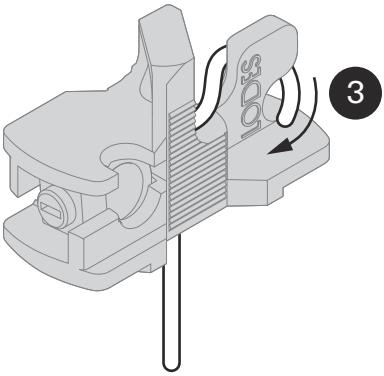
3

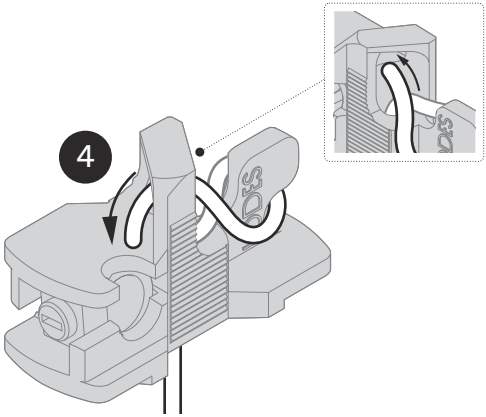
4

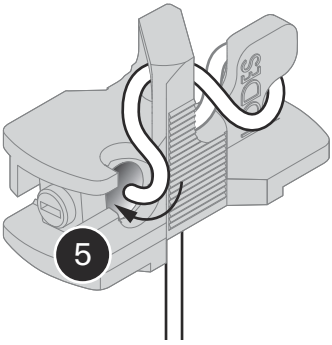
5

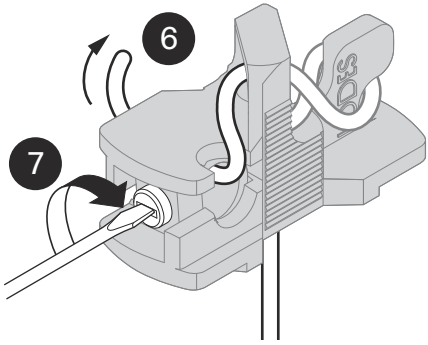
6
7

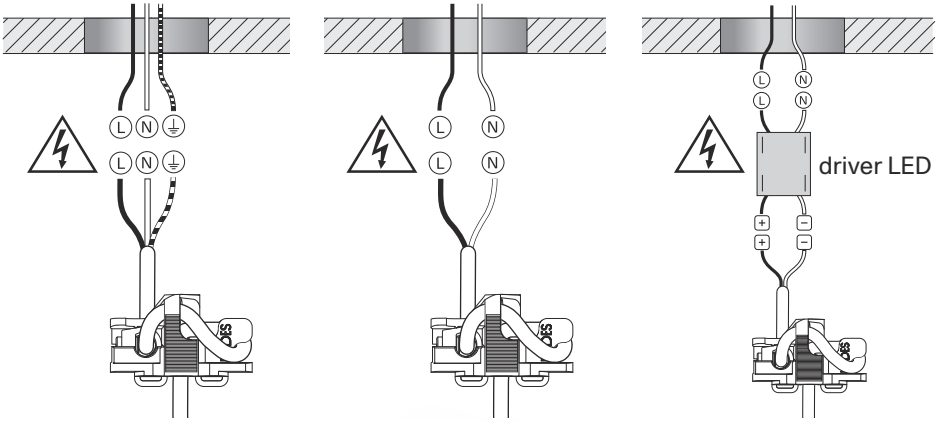
L N
L N
L N
L N
L N
L N
driver LED

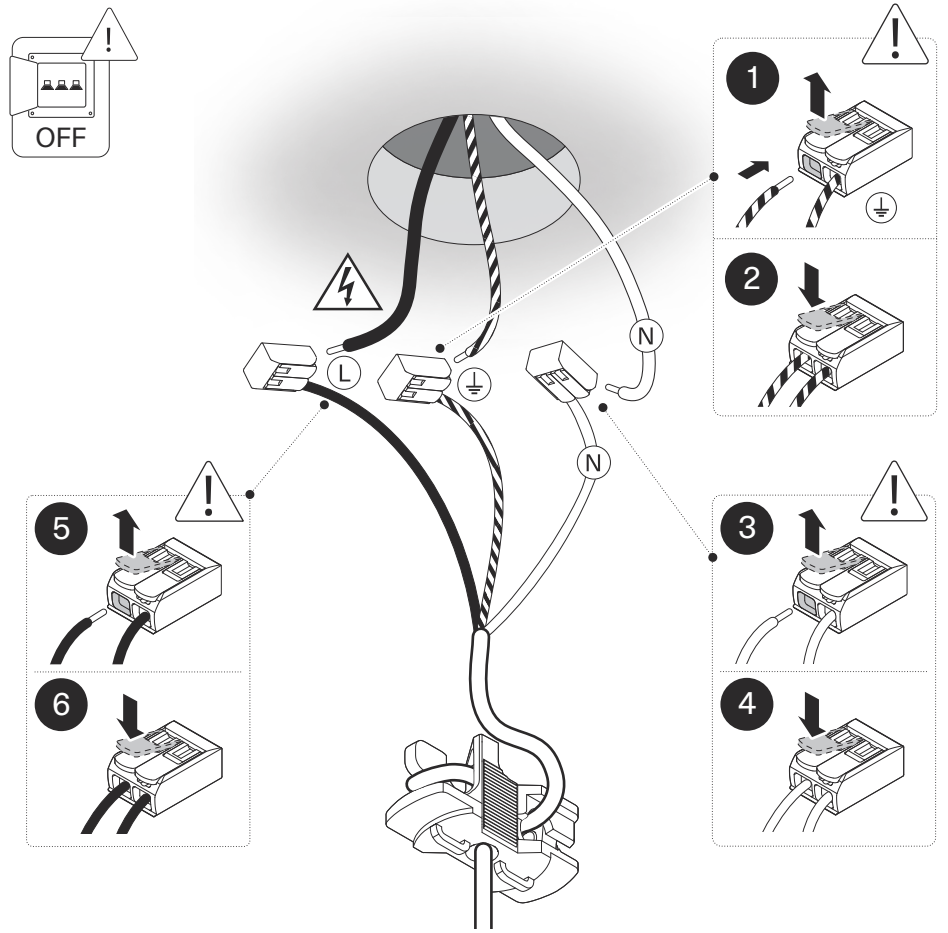
OFF
1
2
3
4
5
6
L
N
N

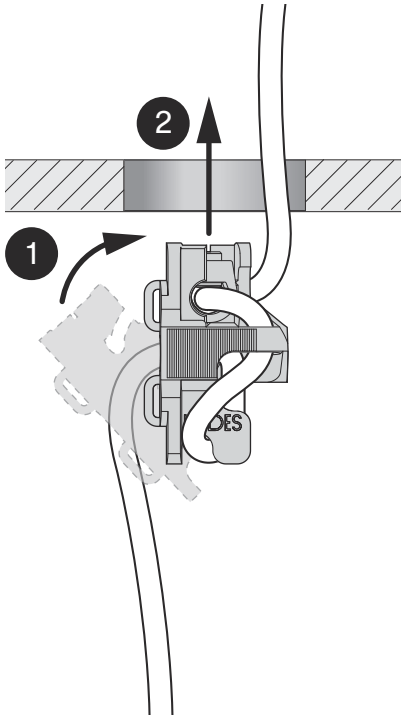
2
1
DES

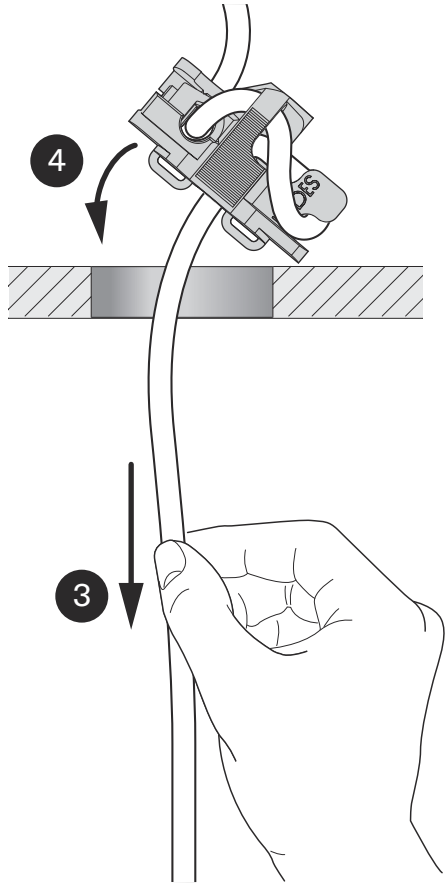
4
DES
3

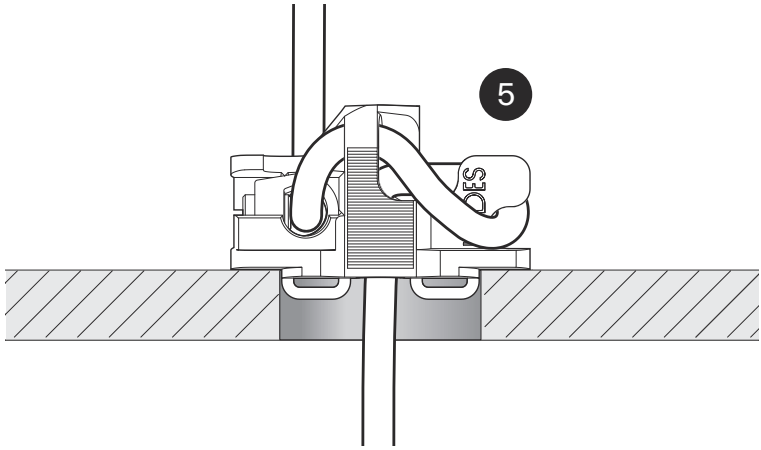
5
DES

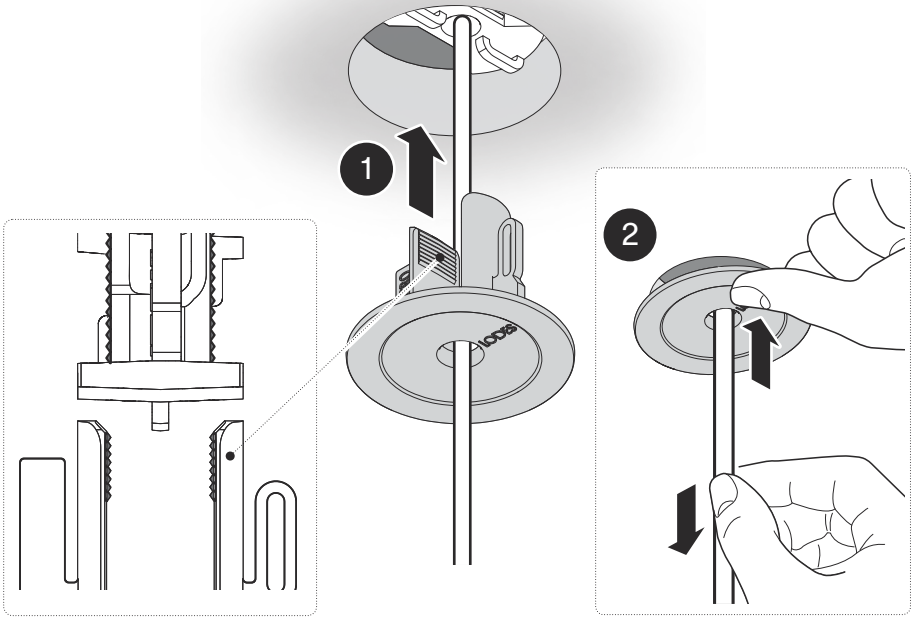
1
2
lodes

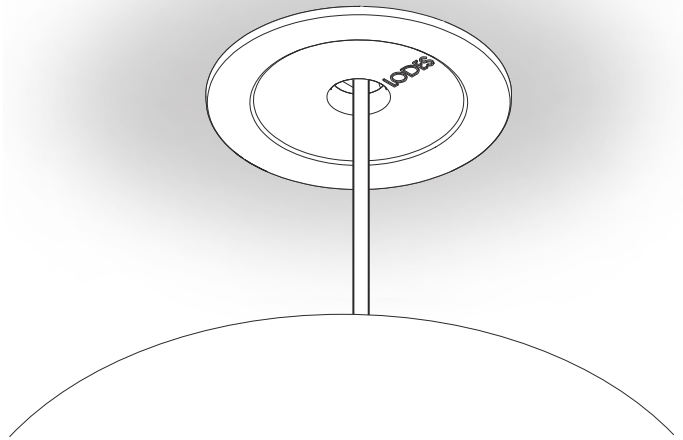
lodes

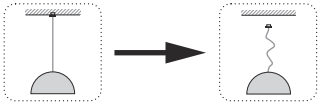

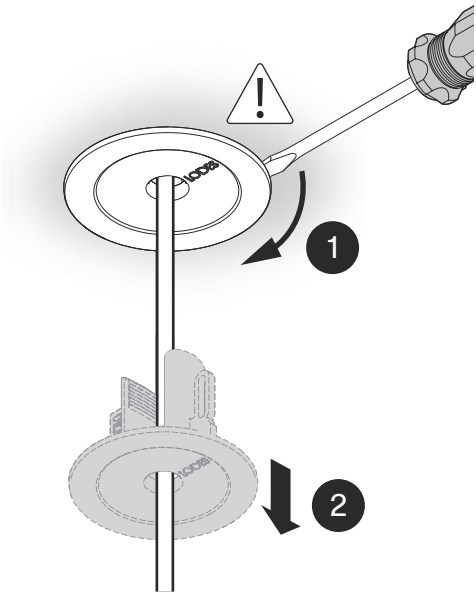
1
2

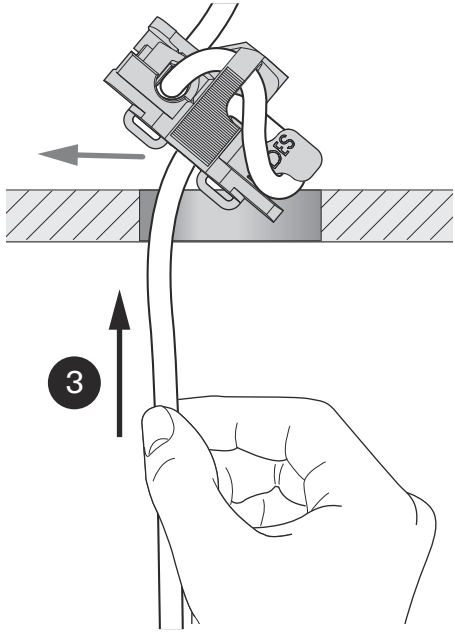
3

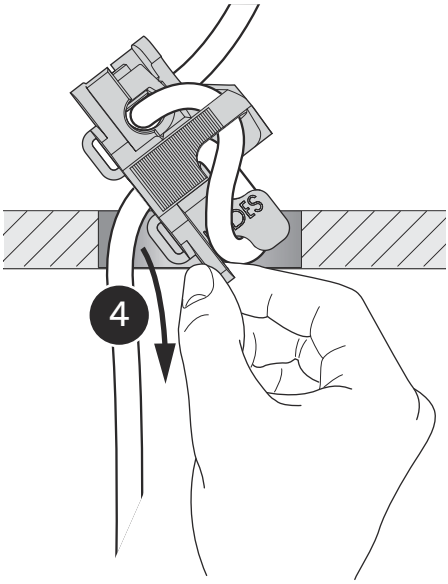
4

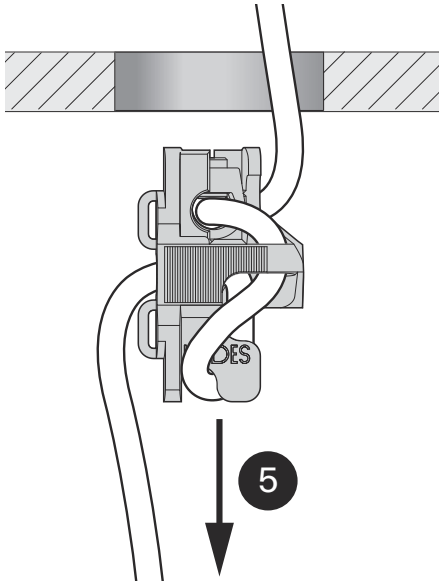
5

English

Keep these instructions for future reference. The device must be installed by qualified personnel only.

● WARRANTY
The products are covered by a warranty for material and manufacturing defects for a period of 12 months from delivery, except in cases where the purchaser is an individual, in which case the warranty period shall be 24 months. During this warranty period, Lodes will repair or replace, at its discretion, any product that is proven to be defective. This warranty does not apply to any damage resulting from accidents, alterations, tampering, misuse, negligence or improper use, or that has been caused by incorrect installation or incorrect maintenance work carried out by unauthorised individuals. The device must not be installed in positions or used in ways other than those indicated in the installation instructions. Any modification may compromise safety and cause the product to become dangerous. Lodes shall therefore not be held liable for any damages caused by alterations or tampering or the product not being used/ installed in compliance with the installation instructions, also in the event of the electrical system and/or the capacity of said system not being suitable.

⚠ WARNING
▸ Clean the product using a soft cloth, slightly dampened with soap or detergent, preferably diluted in water. Never use ethyl alcohol or detergents containing even small amounts of acetone, trichloroethylene, ammonia and solvents in general.
▸ Fix the device in place using a system that is appropriate for the installation surface.
▸ The device must not be installed in positions other than those specified in the assembly instructions.
▸ This device must only be used indoors. Do not use in damp or salty environments.
▸ LODES light fixtures and canopies are made, tested and configured to be installed exclusively with one other.
▸ In order to inspect the electrical connections, it is recommended to follow the installation steps in reverse order until the electrical connections can be inspected.
▸ Turning the power off using the light switch is not sufficient to prevent electrical shock.
▸ ELECTRICAL CONNECTION: 1-Connect the grounding wire of the luminaire to the grounding conductor of the supply circuit. Attach all grounding conductors to the mounting bracket with the ground wire attachment screw. 2- Referring to the installation instruction, connect the wires.

⚠ CAUTION
▸ This product must be installed in accordance with the applicable installation code by a person familiar with the construction and operation of the product and the hazards involved. To guarantee the correct and safe functioning of the light fitting, make sure that it is earthed.

🔥 RISK OF FIRE
▸ Never place flammable material close to your fixture.

Italiano

Conservare queste istruzioni per una manutenzione futura. L'apparecchio deve essere installato da personale qualificato.

● GARANZIA
I prodotti sono coperti da garanzia per difetti di materiale e/o fabbricazione per un periodo di 12 mesi dalla consegna, salvo nei casi in cui l'acquirente risulti essere una persona fisica e in quel caso il periodo di garanzia sarà di 24 mesi.Durante tale periodo Lodes riparerà o sostituirà a sua discrezione, i prodotti che hanno dato prova di difetto. Questa garanzia non è applicata a danni risultanti dall'incidente, alterazione, manomissione, abuso, negligenza o da uso non conforme ovvero errata installazione o errata manutenzione operata da personale non autorizzato. L'apparecchio non deve essere installato in posizioni o in applicazioni diverse da quelle indicate nelle istruzioni di installazione. Ogni modifica può compromettere la sicurezza rendendo l'apparecchio pericoloso. Lodes, declina pertanto ogni responsabilità per danni derivanti da alterazioni, manomissioni e da uso/installazione del prodotto non conforme alle istruzioni di installazione anche nel caso in cui l'impianto elettrico e/o la portata dello stesso non risultino idonei.

⚠ ATTENZIONE
▸ Pulire il prodotto con un panno morbido leggermente inumidito di sapone o detersivi liquidi neutri, meglio se diluiti in acqua. Evitare assolutamente l'uso di alcool etilico o di detersivi contenenti anche in piccole quantità acetone, trielina,

ammoniaca e solventi in generale.
▶ Fissare l'apparecchio utilizzando un sistema idoneo alla superficie di montaggio.
▶ L'apparecchio non deve essere installato in posizioni diverse da quelle indicate nelle istruzioni di montaggio.
▶ Questo apparecchio deve essere utilizzato solo in ambienti interni, non utilizzare in ambienti umidi o salini.
▶ Gli apparecchi e i rosoni Lodes sono stati realizzati, testati e conformati per essere installati esclusivamente gli uni con gli altri.
▶ Al fine di ispezionare le connessioni elettriche si consiglia di seguire le fasi di installazione in ordine inverso finché le connessioni elettriche risultano ispezionabili.
▶ Lo spegnimento dell'apparecchio dall'interruttore non è sufficiente a evitare il rischio di scosse elettriche.
▶ COLLEGAMENTO ELETTRICO: 1- Collegare il cavo di messa a terra della lampada al conduttore di messa a terra del circuito di alimentazione. Fissare tutti i conduttori di messa a terra al supporto di montaggio con l'apposita vite di messa a terra. 2- Collegare i cavi consultando le istruzioni per l'installazione.

⚠ ATTENZIONE
▶ Questo prodotto deve essere installato conformemente al manuale di installazione applicabile da un soggetto con una buona conoscenza delle istruzioni per l'installazione e il funzionamento del prodotto nonché dei rischi connessi. Per garantire un funzionamento corretto e sicuro dell'apparecchio di illuminazione, assicurarsi che sia provvisto di una messa a terra adeguata.

⚠ RISCHIO DI INCENDIO
▶ Non avvicinare materiali infiammabili all'apparecchio.

Français

Conservez ces instructions pour une maintenance future. L'appareil doit être installé par un personnel qualifié.

● GARANTIE
Les produits sont couverts par une garantie pour les défauts de matériau et/ou de fabrication pour une période de 12 mois à compter de la livraison, sauf si l'acquéreur est une personne physique. Le cas échéant, la période de garantie est de 24 mois. Pendant cette période, Lodes réparera ou remplacera, à sa discrétion, les produits qui se sont avérés défectueux. Cette garantie ne couvre pas les dommages résultant d'un accident, d'une altération, d'une intervention non-autorisée, d'un abus, d'une négligence ou d'une utilisation non-conforme, voire d'une installation ou d'une maintenance incorrecte effectuée par un personnel non-autorisé. L'appareil ne doit pas être installé dans des positions ou pour des applications autres que celles indiquées dans les instructions de montage. Toute modification peut compromettre la sécurité de l'appareil et le rendre dangereux. Par conséquent, Lodes décline toute responsabilité pour les dommages dérivant d'altérations, d'interventions non-autorisées et d'une utilisation/installation du produit non-conforme aux instructions d'installation, même dans le cas où l'installation électrique et/ou sa portée ne sont pas appropriées.

⚠ ATTENTION
▶ Nettoyez le produit avec un chiffon doux, légèrement imbibé de savon ou de détergent, préférablement dilués dans de l'eau. Évitez absolument d'utiliser de l'alcool éthylique ou de détergents contenant même de petites quantités d'acétone, de trichloréthylène, d'ammoniac et de solvants en général.
▶ Fixer le luminaire en utilisant un système approprié à la surface de montage.
▶ L'appareil ne doit pas être installé dans des positions autres que celles indiquées dans les instructions de montage.
▶ Cet appareil doit être utilisé uniquement en intérieur, ne pas l'utiliser dans des milieux humides et salins.
▶ Les appareils et les patères Lodes ont été réalisés, testés et conformés pour être installés exclusivement les uns avec les autres.
▶ Afin d'inspecter les branchements électriques, il est recommandé de suivre les phases d'installation dans le sens inverse tant que les branchements électriques sont inspectionnables.
▶ Couper l'alimentation par l'interrupteur ne suffit pas à prévenir les secousses électriques.
▶ BRANCHEMENT ÉLECTRIQUE: 1- Brancher le fil de terre du luminaire au conducteur de terre du circuit électrique. Fixer tous les conducteurs de mise à la terre au support de montage au moyen de la vis de fixation du fil de terre. 2- Connecter les fils conformément aux instructions de montage.

⚠ ATTENTION
▶ Ce produit doit être installé dans le respect

du code d'installation en vigueur par une personne connaissant la fabrication et le fonctionnement du produit et les risques connexes. Afin de garantir le fonctionnement correct et sûr du luminaire, s'assurer qu'il est mis à la terre.

⚠ RISQUE D'INCENDIE
▶ Ne jamais placer de matériaux inflammables à proximité du luminaire.

Deutsch

Bewahren Sie diese Anweisungen zum späteren Nachschlagen auf. Nur von einem qualifizierten Elektrofachmann installieren lassen.

● GARANTIE
Garantie: Die Produkte unterliegen einer Garantie für Material- und/oder Herstellungsfehler für einen Zeitraum von 12 Monaten ab Lieferung, außer in Fällen, in denen der Käufer eine natürliche Person ist; in diesem Fall beträgt die Garantiezeit 24 Monate. Während dieses Zeitraums repariert oder tauscht Lodes, nach eigenem Ermessen, defekte Produkte aus. Diese Garantie gilt nicht für Schäden, die durch Unfall, Veränderung, Manipulation, falschen Einsatz, Nachlässigkeit oder nicht bestimmungsgemäßen Gebrauch sowie falscher Installation oder Wartung durch nicht autorisiertes Personal beruhen. Das Gerät darf nicht in Positionen oder Anwendungen installiert werden, die von denen in der Montageanleitung angegebenen abweichen. Jede Änderung kann die Sicherheit beeinträchtigen und das Gerät gefährlich machen. Lodes lehnt daher jede Verantwortung für Schäden ab, die aus Änderungen, Manipulationen und aus einer Benutzung/ Installation des Produkts resultieren, die nicht den Montageanweisungen entsprechen, auch im Falle, dass das elektrische System und/oder die Leistungsfähigkeit desselben nicht geeignet sind.

⚠ ACHTUNG
▶ Reinigen Sie das Produkt mit einem weichen Tuch, das leicht mit Seife oder Reinigungsmittel angefeuchtet ist. Verwenden Sie niemals Alkohol oder Reinigungsmittel, die auch nur geringe Mengen an Aceton, Trichlorethylen, Ammoniak oder Lösungsmitteln enthalten.
▶ Das Gerät mit einem für die Montagefläche geeigneten System befestigen.
▶ Das Gerät darf nicht in anderen als den in der Montageanleitung angegebenen Positionen installiert werden.
▶ Dieses Gerät darf nur in Innenbereichen verwendet werden. Nicht in feuchten oder salzhaltigen Umgebungen einsetzen.
▶ Baldachine sind so gefertigt, geprüft und angeglichen, dass sie ausschließlich miteinander installiert werden können.
▶ Um die elektrischen Anschlüsse zu überprüfen, wird empfohlen, die einzelnen Installationsschritte in umgekehrter Reihenfolge durchzuführen, bis die Kontrolle an diesen durchgeführt werden kann.
▶ Das Ausschalten über den Lichtschalter reicht nicht aus, um einen elektrischen Stromschlag zu vermeiden.
▶ ELEKTRISCHER ANSCHLUSS: 1-Den Erdungsleiter der Leuchte mit dem Schutzleiter des Versorgungsstromkreises verbinden. Alle Schutzleiter mit der Erdungsdraht-Befestigungsschraube an der Montagehalterung anschließen. 2- Alle Drähte unter Beachtung der Installationsanleitung anschließen.

⚠ WARNUNG
▶ Dieses Produkt muss in Übereinstimmung mit den geltenden Installationsvorschriften von einer Fachkraft installiert werden, die mit der Konstruktion und dem Betrieb des Produkts sowie den damit verbundenen Gefahren vertraut ist. Um die korrekte und sichere Funktion der Leuchte zu gewährleisten, ist sicherzustellen, dass diese geerdet ist.

⚠ BRANDGEFAHR
▶ Niemals entflammbares Material in der Nähe des Gerätes platzieren.

Español

Conserve estas instrucciones para un futuro mantenimiento. El aparato debe ser instalado solo por personal cualificado.

● GARANTÍA
Los productos están cubiertos por una garantía respecto a cualquier defecto de material y/o elaboración durante 12 meses a partir de la fecha de entrega, excepto cuando el comprador sea una persona física en cuyo caso el período de garantía durará 24 meses. Durante dicho período Lodes reparará o sustituirá, a su discreción, los productos que estén defectuosos. Esta garantía no se aplica a daños como consecuencia de accidentes, alteraciones, manipulaciones, abuso, negligencia, uso no conforme

o instalación o mantenimiento incorrecto por parte de personal no autorizado. El aparato no debe instalarse en posiciones o aplicaciones distintas a las que se indican en las instrucciones de instalación. Cualquier modificación puede poner en peligro la seguridad y hacer que el aparato sea peligroso. Por lo tanto, Lodes no se hace responsable de los daños causados por alteraciones, manipulaciones y el uso/ la instalación del producto que no sea conforme con las instrucciones de instalación incluso en caso de que la instalación eléctrica y/o su capacidad no sean idóneas.

⚠ ATENCIÓN

▶ Limpie el producto con un paño suave, ligeramente humedecido con jabón o detergentes líquidos neutros, mejor si están diluidos en agua. Nunca use alcohol etílico o detergentes que contengan incluso pequeñas cantidades de acetona, tricloroetileno, amoníaco y solventes en general.

▶ Fijar el aparato utilizando un sistema idóneo en la superficie de montaje.

▶ El aparato no se debe instalar en otras posiciones que no sean las que se indican en las instrucciones de instalación.

▶ Este aparato sólo se debe utilizar en interiores; no lo utilice en entornos húmedos o salinos.

▶ Los aparatos y los florones Lode se han realizado, testado y ajustado para ser instalados exclusivamente unos con otros.

▶ Para inspeccionar las conexiones eléctricas se aconseja seguir las fases de instalación en el orden contrario hasta que las conexiones eléctricas se puedan inspeccionar.

▶ Apagar el aparato con el interruptor no es suficiente para evitar el riesgo de descargas eléctricas.

▶ CONEXIÓN ELÉCTRICA:

1-Conecte el cable de puesta a tierra de la lámpara al conductor de puesta a tierra del circuito de alimentación. Fije todos los conductores de puesta a tierra en el soporte de montaje con el tornillo de puesta a tierra específico.

2- Conecte los cables consultando las instrucciones de instalación.

⚠ ATENCIÓN

▶ Este producto lo debe instalar con arreglo al manual de instalación un sujeto que conozca bien las instrucciones de instalación y el funcionamiento del producto además de los riesgos relacionados. Para garantizar un funcionamiento correcto y seguro del aparato de iluminación asegúrese de que esté dotado de una puesta a tierra adecuada.

⚠ PELIGRO DE INCENDIO

▶ No aproxime materiales inflamables al aparato.

Русский

Храните эти инструкции для дальнейшего использования.
Для установки только квалифицированным электриком.

● Гарантия

Изделия имеют гарантию на срок 12 месяцев с момента поставки, на дефекты материала и/или дефекты изготовления, за исключением тех случаев, когда покупатель является физическим лицом, поскольку в этих случаях гарантийный период составляет 24 месяца.
Во время этого гарантийного периода Lodes отремонтирует или заменит, на свое усмотрение, изделия, которые оказались дефектными. Эта гарантия не покрывает любые повреждения, причиненные в результате несчастного случая, манипуляций, внесения изменений, злоупотребления, небрежности, эксплуатации с нарушением норм или неправильного монтажа или техобслуживания со стороны не уполномоченного лица. Оборудование не следует устанавливать в положении или для применения, отличающегося от указанного в инструкциях по монтажу. Любые изменения могут поставить под угрозу безопасность, делая оборудование опасным. Lodes не несет никакой ответственности за ущерб, связанный с изменениями, манипуляциями и использованием/ монтажом оборудования не в соответствии с инструкциями по монтажу, а также в том случае, если электрическая установка или ее мощность являются не соответствующими.

⚠ ПРЕДУПРЕЖДЕНИЕ

▶ Выполните очистку продукта с помощью мягкой ткани, слегка смоченной мылом или моющим средством, разбавленным водой. Никогда не используйте этиловый спирт или моющие средства, содержащие даже небольшие количества ацетона, трихлорэтилена, аммиака и растворителя.

▶ Закрепите светильник с применением подходящей

системы к монтажной поверхности.
▶ Запрещается устанавливать изделие в положениях, отличных от указанных в инструкции по монтажу.
▶ Этот прибор предназначен только для использования в помещении, не использовать его во влажных или содержащих соль помещениях.
▶ Светильники и крепления Lodes были изготовлены, испытаны и подходят для установки исключительно друг с другом.
▶ Для проверки электрических соединений рекомендуется выполнять фазы монтажа в обратной последовательности, до тех пор, пока электрические соединения не будут доступны для проверки.
▶ Выключения питания с помощью выключателя света недостаточно для предотвращения поражения электрическим током.
▶ ЭЛЕКТРИЧЕСКОЕ ПОДКЛЮЧЕНИЕ:
1-Подключите заземляющий провод светильника к заземляющему проводу контура питания. Прикрепите все заземляющие провода к монтажному кронштейну с помощью крепежного винта заземляющего провода.
2- Прочитайте инструкции по установке, подсоедините провода.

⚠ ВНИМАНИЕ
▶ Это изделие должно быть установлено в соответствии с применимыми правилами монтажа лицом, знакомым с конструкцией и работой изделия, а также со связанными с ним опасностями. Убедитесь, что осветительный прибор заземлен, чтобы гарантировать его правильную и безопасную работу.

🔥 РИСК ВОЗГОРАНИЯ
▶ Никогда не размещайте горючие материалы рядом с изделием.

繁體中文

请妥善保管本说明书以便将来查阅。应由具备资质的人员安装此设备。

● 保修
Lodes 产品自交付之日起可在12个月内享有材料和/或制造缺陷方面的保修,如买方是自然人,则保修期为24个月。在此期间,Lodes 将自行决定维修或更换已证实存在缺陷的产品。本保修不适用于因事故、改动 、篡改、滥用、疏忽或使用不当,以及由未经授权人员进行的不正确安装或不正确维护而造成的损坏。 设备不得安装于安装说明未指定的位置或应用领域中。 任何改动都可能危及安全,使灯具陷入危险状况。 因此,即使在电气系统和/或其范围不适合的情况下,Lodes 也对因产品改动和篡改以及不符合安装说明而进行的产品使用/安装而造成的损坏概不负责。

⚠ 警告
▶ 用一块稍稍浸湿 液或中性清洗剂(最好稀释)的湿布清洁产品。 禁止使用含有乙醇或含有(包括小剂量)丙酮、三氯乙烯、氨、一般 剂的清洗剂。
▶ 请使用一部适宜系统将照明设备固定于安装表面上。
▶ 不得将设备安装在组装说明指定位置之外的位置。
▶ 本设备仅可在室内使用,请勿在潮湿或含盐环境中使用。
▶ Lodes的照明设备和吊灯底盘仅为两者之间的搭配安装而制造、测试及符规。
▶ 为检查电气连接,建议您倒序遵循安装步骤,直至电气连接显示为可检查状态。
▶ 使用灯具开关将电源关闭,这不足以防止电击。
▶ C电气连接:1-将灯具的接地线连接到供电电路的接地导体。 使用接地专用螺钉将所有接地导体连接到安装支架。 2- 参考安装说明,连接电线。

⚠ 请注意
▶ 本产品须由熟悉产品结构和操作以及相关危险的人员按照适用的安装规范进行安装。 为保证灯具的正确和安全运行,请确保将其接地。

🔥 失火风险
▶ 请勿将易燃材料放在您的灯具临近处。

Legend of symbols

EN **User information on Recycling WEEE (community directive 2014/49/EC)**
The WEEE symbol printed on this product indicates that, at the end of its service life, it must not be disposed of as household waste but is intended forseparate collection. Contact your local waste collection agency or ask the seller for information about public waste collection centres in your area. Even the seller can collect the old product if you purchase a new one of the same type. Incorrect disposal may harm people and the environment due to the presence of hazardous substances. Penalties are envisaged for the unlawful disposal of this type of waste.

IT **Informativa agli utenti sul riciclo RAEE (direttiva comunitaria 2014/49/EC)**
Il simbolo RAEE riportato su questo prodotto indica che quest'ultimo, a fine vita, non deve essere smaltito come rifiuto urbano ma deve essere destinato alla raccolta separata. Per determinare l'ubicazione delle aree pubbliche di raccolta contattare l'ente di raccolta dei rifiuti, o chiedere al venditore. Anche il venditore può ritirare il vecchio prodotto acquistandone uno nuovo dello stesso tipo. Lo smaltimento errato può causare danni alle persone e all'ambiente per la possibile presenza di sostanze pericolose. Sono previste sanzioni in caso di smaltimento abusivo dei suddetti rifiuti.

FR **NOTE D'INFORMATION À L'ATTENTION DES UTILISATEURS SUR E RECYCLAGE – DEEE (Directive Communautaire 2014/49/EC relative aux Déchets d'Équipements Électriques et Électroniques) Le sigle DEEE utilisé pour ce produit indique qu'il peut être traité comme déchet ménager. L'élimination correcte de ce produit contribuera à la protection de l'environnement. Pour en savoir plus sur le recyclage de ce produit, s'adresser au bureau compétent du lieu de résidence, à la société chargée de l'élimination des déchets ménagers ou au magasin où le produit a été acheté.**

DE **RECYCLING-INFORMATIONEN FÜR BENUTZER - WEEE (EU-RICHTLINIE 2014/49/EG)**
Das für dieses Produkt verwendete WEEE-Symbol zeigt an, dass dieses nicht als Hausmüll behandelt werden darf. Durch die korrekte Entsorgung des Produktes wird ein Beitrag zum Umweltschutz geleistet. Weitere Informationen zum Recycling dieses Produkts sind bei der örtlichen Stadtverwaltung, dem Hausmüllentsorgungsdienst oder dem Geschäft, in dem das Produkt gekauft wurde, einzuholen.

ES **NOTA INFORMATIVA PARA LOS USUARIOS SOBRE EL RECICLAJE – RAEE (DIRECTIVA COMUNITARIA 2014/49/CE) El símbolo RAEE utilizado para este producto indica que no se puede tratar como residuo doméstico. Eliminar correctamente este producto ayuda a proteger el medio ambiente. Para más información sobre el reciclaje de este producto, diríjase a la oficina de la autoridad local correspondiente, a la empresa encargada de la eliminación de los residuos domésticos o a la tienda donde ha adquirido el producto.**

RU ИНФОРМАЦИЯ ДЛЯ ПОЛЬЗОВАТЕЛЕЙ ПО УТИЛИЗАЦИИ - RAEE (ДИРЕКТИВА СООБЩЕСТВА 2014/49/EC) Символ RAEE, используемый для данного изделия, указывает на то, что его нельзя утилизировать как бытовые отходы. Правильная утилизация данного изделия способствует защите окружающей среды. Для получения дополнительной информации об утилизации этого изделия просим обращаться в компетентное учреждение местного административного органа, в компанию, отвечающую за утилизацию бытовых отходов, или в магазин, где было приобретено изделие.

ZH **致用户的回收信息– RAEE (2014/49/EC)**
号欧盟指令） 用于本产品的RAEE符号指示本产品不可作为生活垃圾进行处理。妥善处置本产品将有助于环境保护。有关本产品回收的更多信息,请联系当地政府的权威当局、生活垃圾处置公司或购买本产品的商店进行咨询。

EN Danger of electric shock
IT Pericolo di scossa elettrica
FR Risque de secousse électrique.
DE Gefahr eines elektrischen Stromschlags.
ES Peligro de descarga eléctrica.
RU Опасность электрического разряда.
ZH 电击危险。

EN This certifies that the product complies with the provisions of EC directives.
IT Attesta la conformità del prodotto alle disposizioni delle direttive comunitarie.
FR Atteste la conformité du produit aux dispositions des directives communautaires.
DE Die Konformität des Produkts mit den Bestimmungen der Gemeinschaftsrichtlinien wird bescheinigt.
ES Certifica la conformidad del producto con las disposiciones de las directivas comunitarias.
RU Удостоверяет соответствие изделия положениям директив Сообщества.
ZH 证明产品符合欧盟指令的规定。

EN EAC marking confirms the compliance of the goods with the Eurasian Customs Union.
IT EAC un marchio che attesta la conformit delle merci alle norme dell'Unione doganale euroasiatica.
FR EAC marking confirms the compliance of the goods with the Eurasian Customs Union.
DE EAC ist eine Kennzeichnung, die bescheinigt, dass die Waren den Vorschriften der Eurasischen Zollunion entsprechen.
ES EAC es un sello que certifica la conformidad de las mercancías con las normas de la unión aduanera euroasiática.
RU EAC - знак, удостоверяющий соответствие товаров правилам Евразийского таможенного союза.
ZH EAC是一项证明商品符合欧亚关税同盟规范的标志。

EN This product was made using specific processing techniques and treatments, aimed at creating unique results. Any differences between individual items are therefore designed to ensure that every single product is special and unique.

IT Questo prodotto è stato realizzato con particolari lavorazioni e trattamenti al fine di ottenere risultati unici. Per tale ragione, eventuali differenze da pezzo a pezzo sono volte a garantire specialità ed unicità ad ogni singolo prodotto.

FR Ce produit a été soumisà des ennoblissements et des traitements spéciaux pour des résultats uniques. Pour cette raison, les éventuelles différences d'une pièce à l'autre garantissent la particularité et l'unicité de chaque article.

DE Dieses Produkt wurde mit speziellen Verfahren und Behandlungen hergestellt, um einzigartige Ergebnisse zu erzielen. Aus diesem Grund sind eventuelle Unterschiede von Teil zu Teil beabsichtigt, um die Besonderheit und Einzigartigkeit jedes Produkts zu gewährleisten.

ES Este producto se ha realizado con elaboraciones y tratamientos especiales para conseguir resultados únicos. Por ese motivo las diferencias que pueda haber entre una pieza y otra sirven para garantizar que cada producto es especial y único.

RU Данный продукт был реализован с применением особых методов обработки, для получения уникальных результатов. По этим причинам возможные отличия наших изделий гарантируют уникальность и особые характеристики каждого конкретного изделия.

ZH 为收获独具特色的效果，本产品经由特殊工艺和处理制成。因此,每件产品之间可能存在的任何差异均为对单件产品之特殊性和独特性的保证。

Limited Warranty
12 months
for United States
and Canada Only

COVERAGE

Lodes, with headquarter in 30020 Marcon (VE), Via Pialoi 32 Italy, VAT N.: 02992370276 (hereinafter, "Lodes" or "WARRANTOR") warrants that each Lodes PRODUCT will be free from defects in material and workmanship for a period of twelve months from the date of shipment / delivery of the PRODUCT (that can be identified by the "Studio Italia Design" trademark, trade name, or logo affixed to them). The Limited Warranty is referred to herein as "the Limited Warranty." The PURCHASER's sole and exclusive remedy under this Limited Warranty for defects in the PRODUCT shall be the repair, replacement or refund of the purchase price, in WARRANTOR's sole discretion, of the defective PRODUCT, or components thereof.

NOT COVERED

This Limited Warranty also does not apply to, and WARRANTOR shall have no liability or responsibility in respect of, damages or expenses relating to:

• Any PRODUCT purchased from any entity other than WARRANTOR;

• Alteration, change or modification of the PRODUCT, including its subcomponents, parts or assemblies;

• WARRANTOR also makes no warranty that a PRODUCT manufactured does not infringe the intellectual property or other proprietary rights of any third party;

• Accidents, misuse, abuse, abnormal use, improper use, negligent use, wilful misconduct, or use exceeding the recommended and permitted limits of the PRODUCT, and / or normal wear or deterioration;

• Any defect or non-conformity that has not been timely and promptly communicated in writing to WARRANTOR as set forth herein.
- Any damage, cost or expense caused by Act of God; or

• Loss of time, loss of use, inconvenience, loss of profits, lost business, lost business opportunities, damage to reputation, goodwill and any incidental or consequential damages arising out of or relating to the PRODUCT, or other matters not specifically covered hereunder.

PROCEDURE

Upon delivery, PURCHASER shall, with in one (3) business day, inspect the PRODUCT for conformity and visible defects. PURCHASER shall give WARRANTOR immediate written, specific and detailed notice of any non- conformities or defects regarding the PRODUCT. Upon receipt of the written notice of claim, WARRANTOR shall have the right to inspect the PRODUCT. In the event of a defect covered by this Limited Warranty, WARRANTOR will, at WARRANTOR's discretion, repair or replace the PRODUCT or any component of the PRODUCT or refund the purchase price for that particular PRODUCT. In the event that PURCHASER submits a warranty claim that, in the sole reasonable discretion of the WARRANTOR, is unfounded, the PURCHASER shall reimburse the WARRANTOR all reasonable costs incurred by the WARRANTOR in evaluating the warranty claim (i.e. travel, lodging, expert evaluations, etc.). WARRANTOR must approve, in advance and in writing, all repairs or replacements covered under or performed pursuant to this Limited Warranty. Any warranty repairs or service must be performed exclusively by WARRANTOR or other authorized representative of WARRANTOR or by another servicing facility pre-approved in writing by WARRANTOR. Acceptance of any Limited Warranty claim is not an admission that any PRODUCT or any of its component parts are defective. The PURCHASER forfeits any rights it may have under this Limited Warranty if the PURCHASER does not follow the procedure described herein.

All requests and notices under this
Limited Warranty shall be directed to:

Lodes S.r.l.,
Via Pialoi n. 32,
30020 Marcon (VE), Italy
E-mail: legal@lodes.com
Fax: +39 0414 56 73 37

LIMITATION OF DAMAGES

Except as expressly provided by this Limited Warranty, WARRANTOR SHALL NOT BE RESPONSIBLE FOR ANY INCIDENTAL OR CONSEQUENTIAL DAMAGES ASSOCIATED WITH THE USE OR NON-USE OF THE PRODUCT OR A CLAIM UNDER THIS LIMITED WARRANTY, WHETHER THE CLAIM IS BASED ON CONTRACT, TORT OR OTHERWISE. The foregoing statements of warranty are exclusive and in lieu of all other remedies or damages. Some States do not

allow the exclusion or limitation of incidental or consequential damages, so only in this case this limitation or exclusion may not apply to you.

This Limited Warranty shall be the sole and exclusive remedy available to the PURCHASER with respect to this PRODUCT. In the event of any alleged breach of any warranty or any legal action brought by the PURCHASER, based on breach of warranty, alleged negligence or other tortious conduct by WARRANTOR, the PURCHASER's sole and exclusive remedy will be the repair or replacement of any defective PRODUCT as stated herein. In no event shall the liability of the WARRANTOR exceed the purchase price of the PRODUCT.

DISCLAIMER. ANY IMPLIED WARRANTY OF MERCHANTABILITY OR FITNESS FOR A PARTICULAR PURPOSE AND ALL IMPLIED WARRANTIES ARISING FROM A COURSE OF DEALING, USAGE OF TRADE, BY STATUTE OR OTHERWISE, IS HEREBY STRICTLY LIMITED TO THE TERM OF THIS WRITTEN WARRANTY. This Limited Warranty shall be the soleand exclusive remedy available to the PURCHASER with respect to this PRODUCT. In the event of any alleged breach of any warranty or any legal action brought by the PURCHASER based on alleged negligence or other tortious conduct by WARRANTOR, the PURCHASER'S sole and exclusive remedy will be repair or replacement of defective materials or refund of the purchase price, as stated herein.

TRANSFER OF LIMITED WARRANTY

This warranty is made by WARRANTOR with only first PURCHASER of the PRODUCT and does not extend to any subsequent PURCHASER or any third parties. The unexpired portion of this Limited Warranty may not be transferred to any entity.

APPLICABLE LAW

This Limited Warranty shall be deemed to have been particularly negotiated between parties. The parties expressly acknowledge and irrevocably agree that any and all claims or disputes arising out of or otherwise relating to this Limited Warranty shall be decided exclusively by Court of Venice under Italian Law with the exclusion of any courts of any place. PURCHASER expressly waives any provision of law in the jurisdiction in which PURCHASER is located or any other potentially applicable law which conflicts with any provision of this Limited Warranty at any time.

OTHER RIGHTS

Your acceptance of delivery of The PRODUCT constitutes your acceptance of the terms of this Limited Warranty. This Limited Warranty gives you specific legal rights, and you may also have other rights which vary from state to state. If any term or provision of this Limit- ed Warranty is invalid or unenforceable under any local, state, or federal law, statute, judicial decision, regulation, ordinance, executive order or other rule of law, such term shall be deemed reformed or deleted, but only to the extent necessary to comply with such statute, regulation, ordinance, order or rule and the remaining provisions of this Limited Warranty shall remain in full force and effect.

ENTIRE AGREEMENT

This document alone contains the entire Limited Warranty given by WARRANTOR in respect of the PRODUCT. Nothing in WARRANTOR's product literature, marketing materials, advertisements and technical specifications expand or enlarge the scope of this Limited Warranty. There are no terms, promises, conditions or warranties regarding the PRODUCT other than those expressly contained herein. WARRANTOR specifically does not authorize any person, including but not limited to any dealer or other agent or employee of WARRANTOR, to extend the time, scope, terms or conditions of this Limited Warranty or to create or assume for WARRANTOR any other obligation or liability with respect to the PRODUCT or other products designed, manufactured or sold by WARRANTOR. All terms of this Limited Warranty are contractual and not mere recitals, and constitute material terms of this Limited Warranty. It is agreed and acknowledged that the provisions of this Limited Warranty allocate the risks between WARRANTOR and PURCHASER, that WARRANTOR's pricing reflects this allocation of risk, and but for this allocation and limitation of liability, WARRANTOR would not have entered into this Limited Warranty. The agents, employees, and dealers of Lodes Products are not authorized to make modifications to this limited warranty or make additional warranties binding on Lodes. **THIS DOCUMENT AND ALL PROVISIONS CONTAINED HAS BEEN SPECIFICALLY AGREED BETWEEN THE PARTIES.**

Head offices

Lodes, via Pialoi 32,
30020 Marcon (Venezia) Italy
T +39 041 45 69 266
info@lodes.com

@lodesbrand

See our collections

Showrooms

Lodes Paris
Novaluce S.a.r.l.
131 Rue du Faubourg
Saint–Honoré
75008 Paris, France
T. +33 142 890 318
paris@lodes.com

Lodes Doha
Abensal Lighting
C–Ring Road, St. 230
Zone 41, Building no. 245
Al Hilal – Doha, Qatar
T. +974 4016 4866
qatar@abensal.com

©2021 Lodes S.r.l.