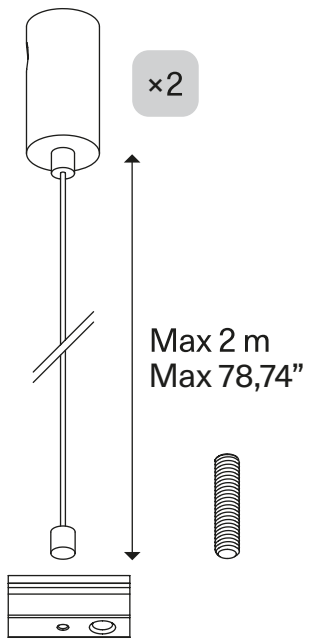
×2
Max 2 m
Max 78,74”